DL

Manufacturing, Inc.

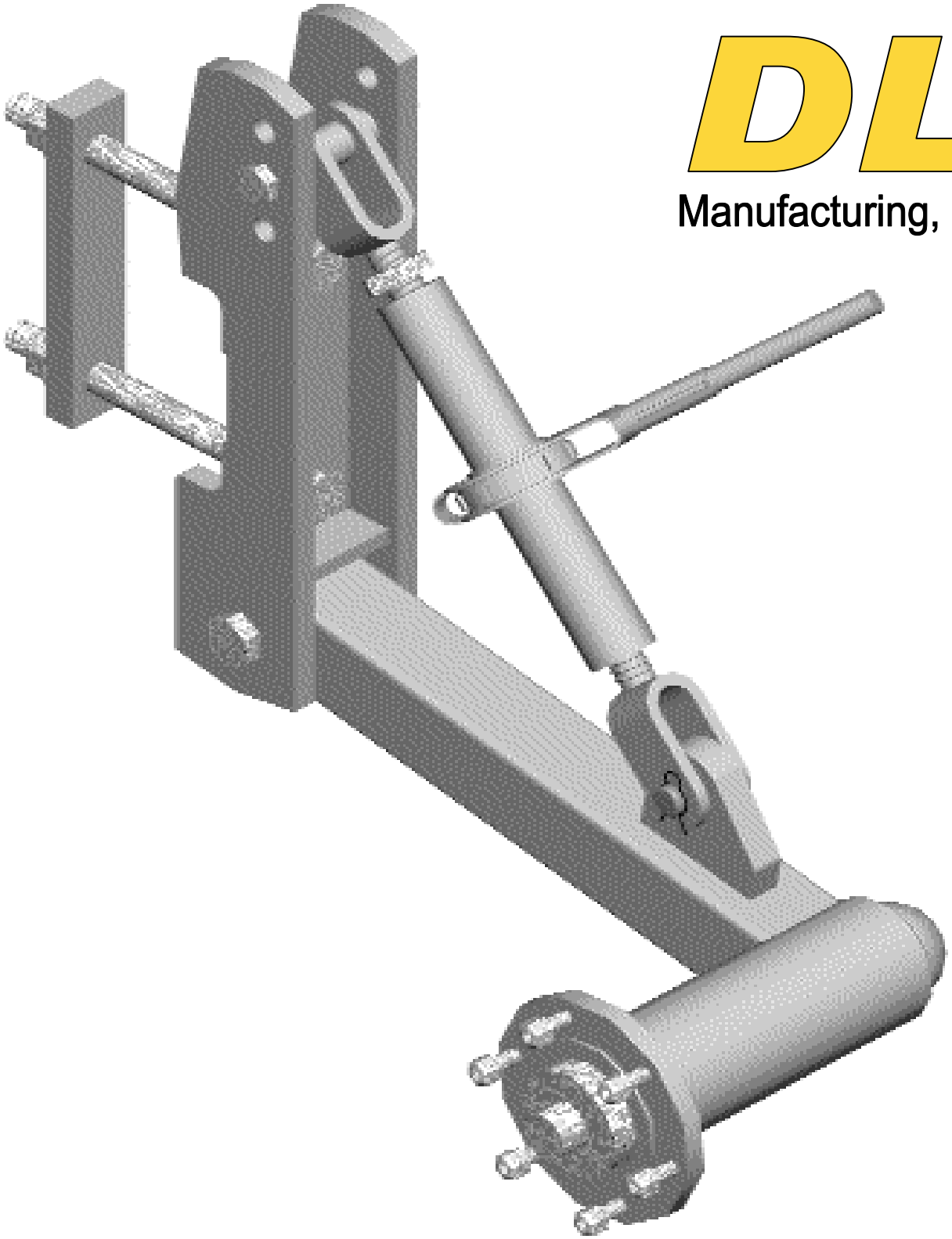

GW-7S

Standard Gauge Wheel

DL

Manufacturing, Inc.

Standard Gauge Wheel

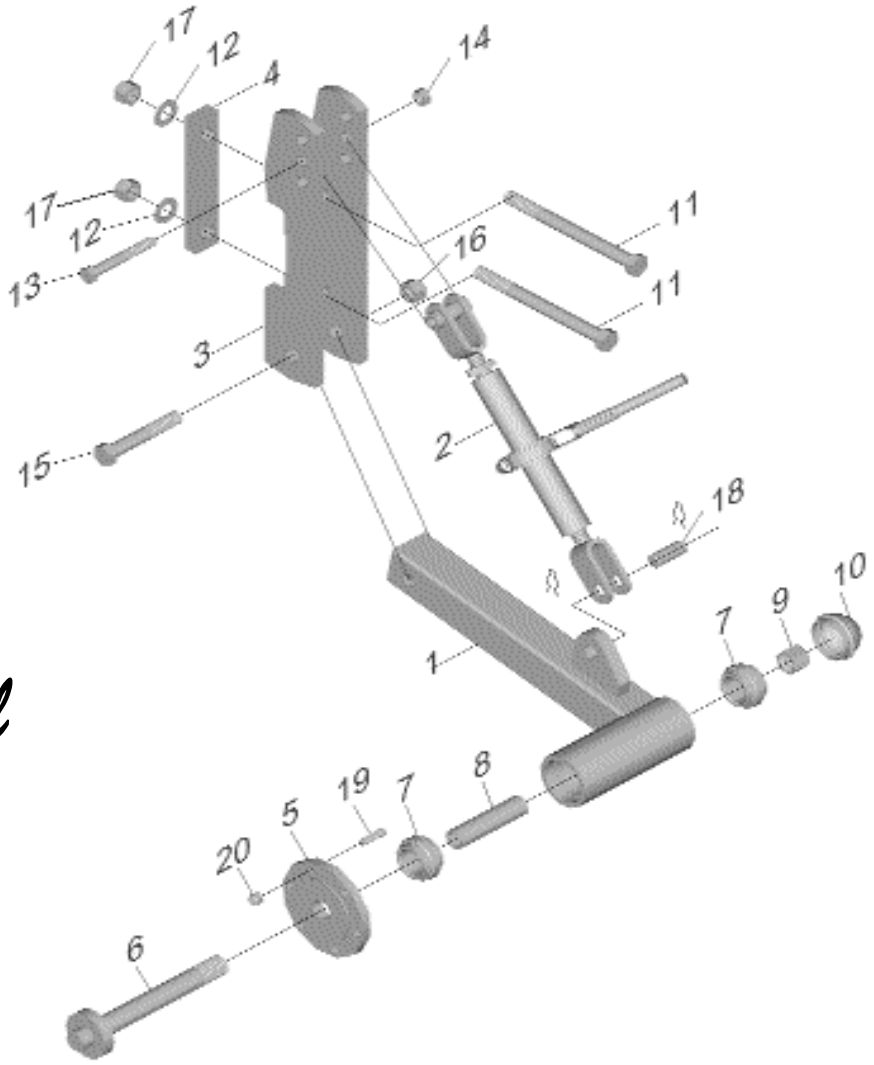

GW-7S RH & LH

Key	Part No.	Description	Qty
1-A	GW7SA-LH	Standard Gauge Wheel Arm - Left	1
1-B	GW7SA-RH	Standard Gauge Wheel Arm - Right	1
2	GW7S-T	Gauge Wheel Turnbuckle	1
3	GW7S-M	Gauge Wheel Mount	1
4	GW7S-S	Gauge Wheel Strap	1
5	GW7S-H	Wheel Plate ("Hub Assembly")	1
6	GW7S-AX	Gauge Wheel Axle	1
7	RS012	DC208TT10 Bearing	2
8	GW7S-C	Gauge Wheel Crush Sleeve - 5 13/16"	1
9	RS072	1 1/4" - 7 Nylock Nut YZ	1
10	GW7S-D	Gauge Wheel Dust Cap	1
11		1" - 8 x 11" Hex Bolt YZ	2
12		1" Lock Washer YZ	2
13		3/4" - 10 x 5 1/2" Hex Bolt YZ	1
14		3/4" - 10 Nylock YZ	1
15		1" - 8 x 6" Hex Bolt YZ	1
16		1" - 8 Nylock Nut YZ	1
17		1" - 8 Regular Hex Nut	2
18	GW7S-P	Gauge Wheel Turnbuckle Pin	1
19	GW7S-H2	1/2" - 20 x 1.66 Wheel Stud	6
20	GW7S-H3	1/2" - 20 Wheel Nut CZ	6

Notes: